KAGAMA

RIGHT CHASSIS GUARD

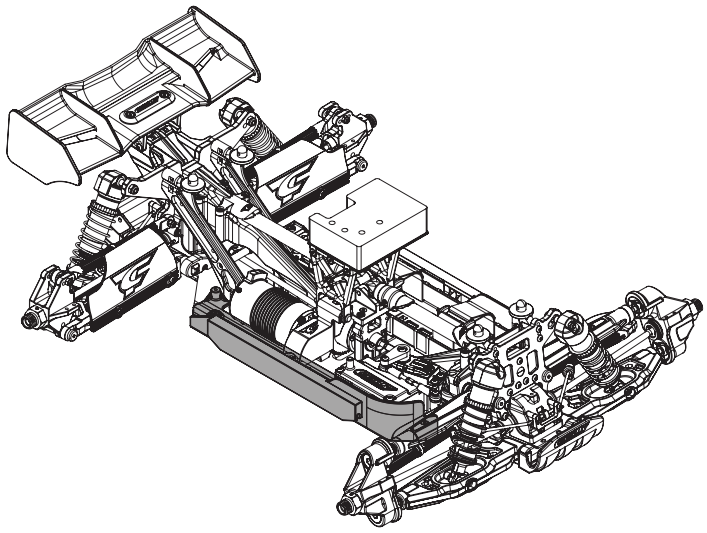

Required Tools:

- 2.0 Hex Driver
- 2.5 Hex Driver
- 3.0 Hex Driver
- Thread-locker

STEP 1

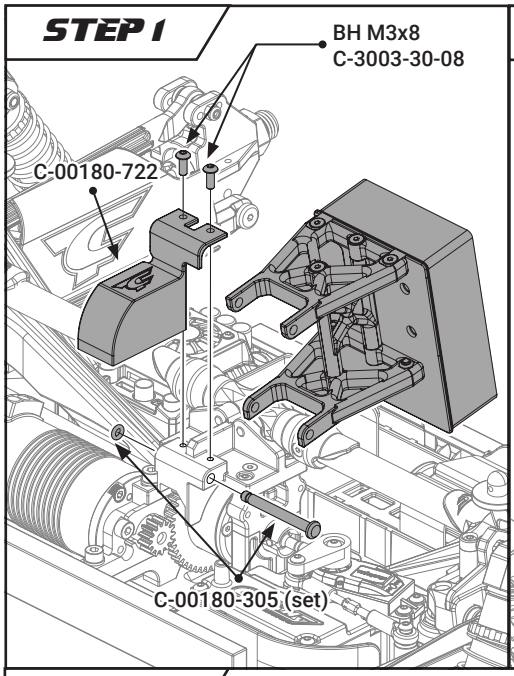

STEP 2

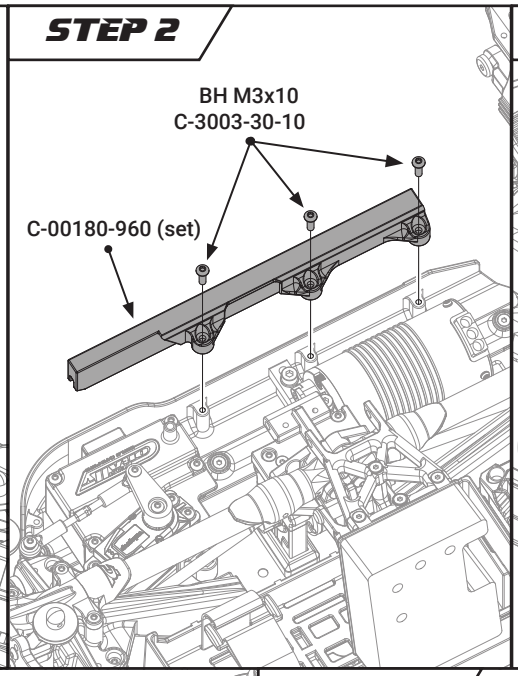

STEP 3 - 4

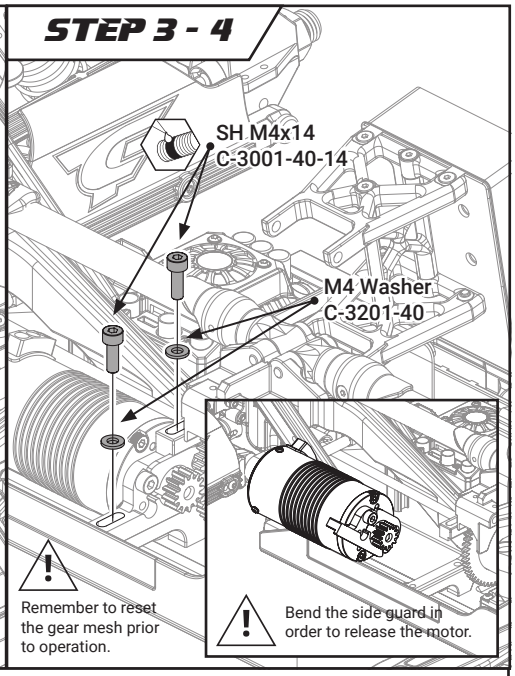

STEP 5

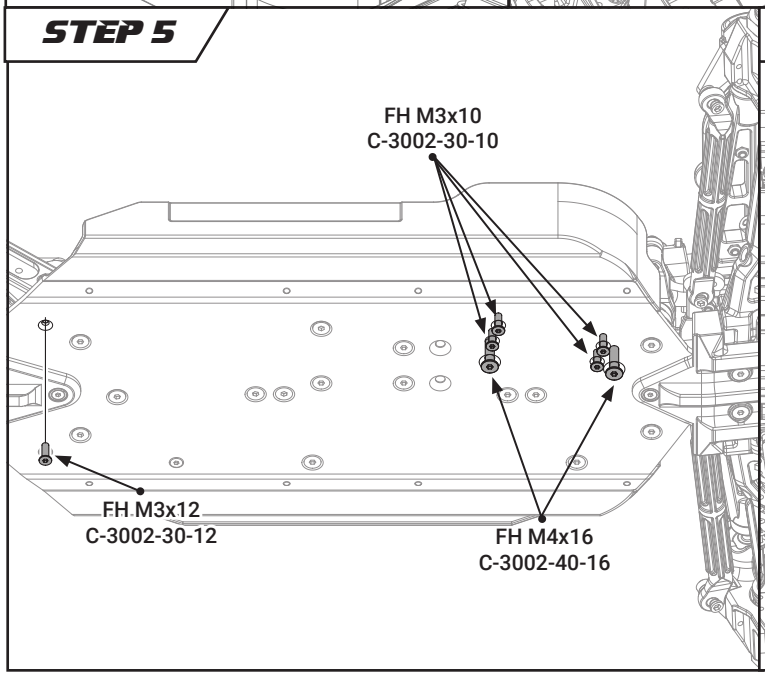
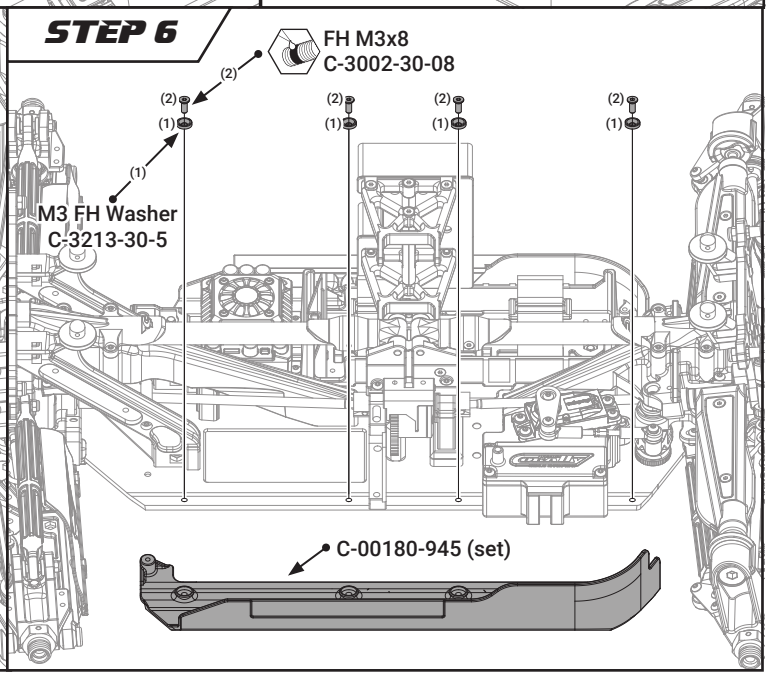
STEP 6